POWRMATIC

Powerful. Efficient. Built for Industry.

High-performance warm air heating with ultra-low NOx technology, delivering efficient, reliable comfort for commercial and industrial buildings.

CXG

Warm Air Cabinet Gas Fired Heater Range



www.powrmatic.co.uk

CXG Warm Air Cabinet

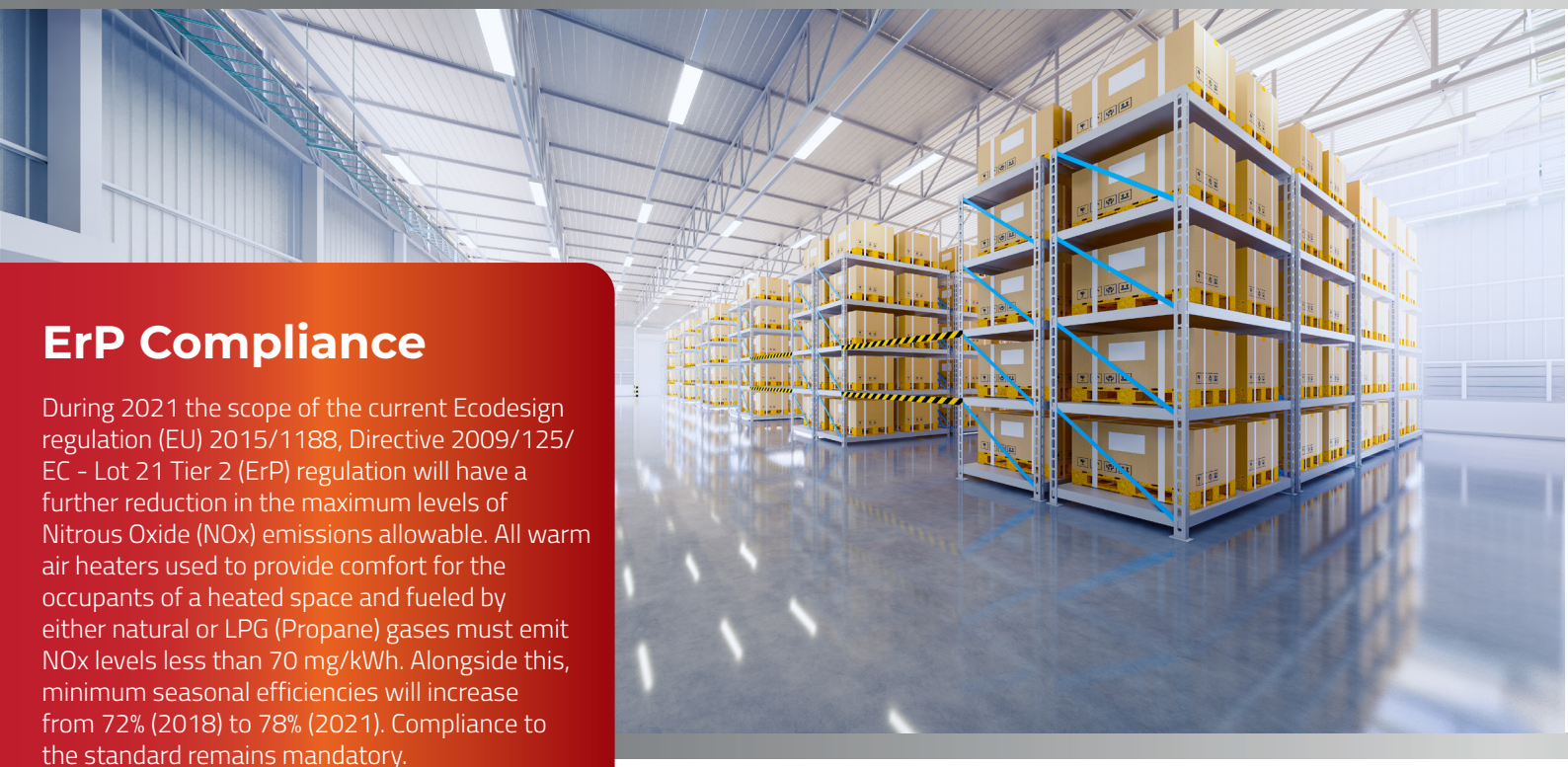

ErP Compliance

During 2021 the scope of the current Ecodesign regulation (EU) 2015/1188, Directive 2009/125/EC - Lot 21 Tier 2 (ErP) regulation will have a further reduction in the maximum levels of Nitrous Oxide (NOx) emissions allowable. All warm air heaters used to provide comfort for the occupants of a heated space and fueled by either natural or LPG (Propane) gases must emit NOx levels less than 70 mg/kWh. Alongside this, minimum seasonal efficiencies will increase from 72% (2018) to 78% (2021). Compliance to the standard remains mandatory.

Efficency. Performance. Compliance.

Powrmatic's ErP 2021-compliant CX range of cabinet-type heaters combines installation versatility with a range of kW outputs to match the most stringent applications. The new CX features the new modulating ultaara-low NOx INVERTERJET® from BURNERTECH making it the perfect choice for businesses and industries looking to reduce their carbon footprint.

The range can be installed in the heated space, be sited in plant rooms and specified for either vertical or horizontal installation. The CX EA range can also be specified for external applications.

The CX heaters are equipped with fully adjustable air distribution nozzle heads to give the ability to direct warmed air within the heated space. Duct outlet CX can be specified with different external static pressures to give maximum versatility for air handling type installations.

Models Available Heading

- CX UF - Upright Freeblowing
- CX UD - Upright Ducted
- CX HF - Horizontal Freeblowing
- CX HD - Horizontal Ducted
- CX EA - External

Heater

ErP 2021 READY PRODUCT FROM POWRMATIC

Product Features

Extensive kW Output Range

With ten outputs ranging from 30kW through to 300kW in both vertical and horizontal arrangement. Internal and external design and free blowing or ducted supply air.

Adjustable Heat Distribution

Horizontal and upright free blowing cabinet heaters are supplied with fully adjustable air distribution nozzle heads with variable louvers giving the ability to direct the heated air where its needed.

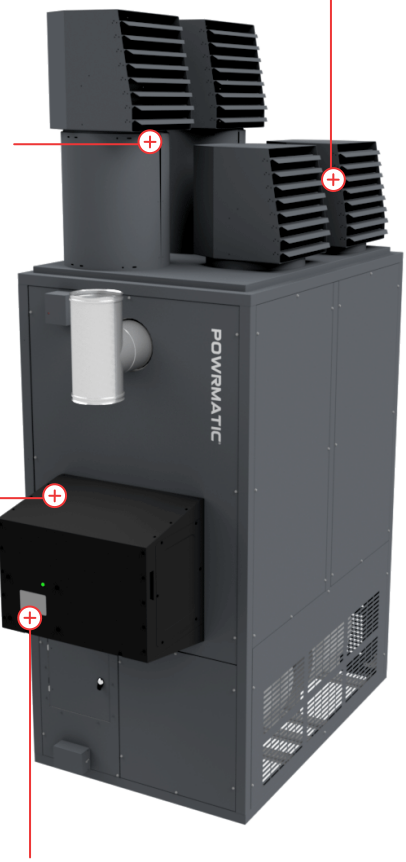

Horizontal Models

CX versatility is enhanced with the availability of horizontal types for applications where space and air direction is specific.

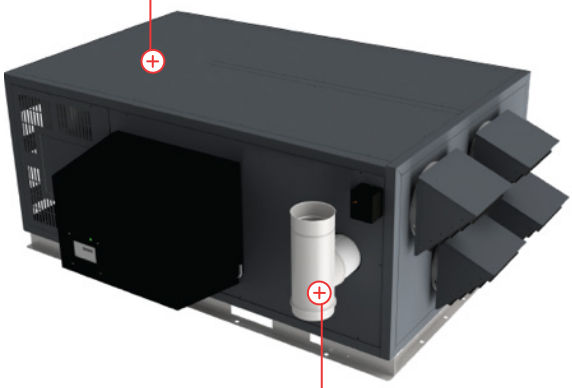

Burner Technology & Access Cover

Powrmatic working alongside market leading burner manufacturer Burnertech now utilise a pre-fitted and tested low NOx, fully enclosed modulating "Inverterjet" burner as standard. All heaters are set to run on Natural Gas only. The burner cover is also easily accessible and removable for maintainance and installation.

Reduced NOx Emissions

ErP 2021 regulations demand reduced NOx and increased seasonal efficiency, CX meets these standards by utilising state of the art burners, air movement and control technology whilst maintaining the temperature rises required in cabinet heater installations.



External Weatherproof Models

CX is available as an external (EA) version. Where the recirculated supply air is contaminated or there is a fresh air requirement as is often the case in garage and heavy industrial settings these types can be installed outside and ducted into the area to be served.

Fitted & Pre Tested Burner And Control

All CX are supplied with a fitted and tested burner. MC200V3 optimum start and stop fuel saver controls will be either pre fitted or supplied remote according to the model specified, other control options and strategies are available to suit particular applications. MC200 fuel saver controls are fitted as standard to internal upright cabinets. Horizontal and external models have controls supplied loose, optional controls can be accommodated when required.

CE

Approvals

CX heaters are type tested and CE approved. In addition, CX heaters made available to the market 2021 onwards comply with the requirements of the Directive 2009/125/EC - Lot 21 Tier 2 (ErP) regulations.

Technical Specification

Model				30	45	60	90	120	150	175	200	250	300
Output		High Fire (max)	kW	29.9	46.3	59.6	90.2	120.1	149.8	174.5	199.6	252.7	300.6
		Low Fire (min)	kW	29.9	46.3	59.6	90.2	120.1	149.8	174.5	199.6	252.7	300.6
Input (nett CV)		High Fire (max)	kW	32.45	50.76	64.55	100.20	129.30	163.43	186.85	214.45	269.58	323.21
		Low Fire (min)	kW	18.34	15.76	20.36	30.44	38.79	57.50	58.85	64.19	81.61	98.01
NOx Seasonal (Gross)			mg/kWh	52.2	39.3	38.1	38.5	38.2	64.0	34.3	38.9	29.1	32.6
Seasonal Space Heating Energy Eff			% ηs,h	76.4%	78.3%	79.2%	79.8%	80.1%	79.3%	80.0%	80.3%	80.1%	79.8%
Airflow	Volume		m^3/s	0.6	0.9	1.0	1.7	1.9	2.7	3.2	3.5	4.0	5.0
	Heads	UF / HF	No.	2	2	3	3	4	4	4	4	4	4
		Size	mm	203	254	254	254	305	305/358	358	358	457	457
	Throw	UF / HF	m	15	21	19	24	24	29	29	29	41	48
	Fan Static	Standard	Pa	350	260	180	320	280	220	240	240	305	205
		Uprated LHP	Pa	n/a		340	400	510	580	400	400	385	425
Electrics	Standard Fan	Motor (Input)	W	1130	1130	1000	1400	1700	3421	4516	4516	3421	6140
		Supply	V/ph/Hz	230/1/50				400/3/50					
		Run	amp	4.0	5.0	4.0	7.5	4.9	4.2	5.0	7.5	3.0	9.5
		Start	amp	21.5	21.5	26.5	49.0	37.8	51.3	68.4	68.4	57.0	21.1*
	Optional Std Fan	Motor (Input)	W	n/a				2200	2820	n/a			
		Supply	V/ph/Hz					230/1/50					
		Run	amp					10.0	11.5				
		Start	amp					50.0	50.6				
	Optional Uprated Fan (L.H.P.) 3Phase	Motor (Input)	W	n/a		2538	2538	3421	3421	4516	6140	6140	8300
		Supply	V/ph/Hz			400/3/50							
		Run	amp			3.0	3.2	5.8	5.0	7.0	7.0	8.0	13.5
		Start	amp			24.4	36.2	51.3	51.3	68.4	21.1*	21.1*	28.5*
	Optional Uprated Fan (L.H.P.) 1Phase	Motor (Input)	W	n/a		2820	2820	3614	n/a				
		Supply	V/ph/Hz			230/1/50							
		Run	amp			8.0	10.0	15.0					
		Start	amp			32.5	50.6	109.7					
Fuel	Connection		BSP/Rc	1/2"	1/2"	1/2"	1/2"	3/4"	1"	1"	1"	1½"	1½"
	NG Consumption (nominal)		m^3/h	3.4	5.4	6.8	10.6	13.7	17.3	19.8	22.7	28.5	34.2
	LPG Consumption (nominal)		m^3/h	1.3	2.1	2.6	4.1	5.3	6.7	7.6	8.8	11.2	13.2
			kg/h	2.5	3.9	5.0	7.8	10.0	12.7	14.5	16.7	20.9	25.1
Overall Dimensions	UF Upright Freeblowing	max Height (incl. heads)	mm	2005	2005	2476	2567	2821	2821	3053	3140	3272	3272
		Width	mm	669	669	744	744	904	904	904	904	1104	1104
		Depth (no burner)	mm	732	732	927	927	1200	1200	1399	1399	1599	1599
		Depth (with burner)	mm	1083	1083	1278	1278	1640	1640	1839	1839	2039	2039
Installation Clearances	UF Upright Freeblowing	Front	mm	1000	1000	1000	1000	1000	1000	1000	1000	1000	1000
		Side	mm	1000	1000	1000	1000	1000	1000	1000	1000	1000	1000
		Blank Side	mm	150	150	150	150	150	150	150	150	150	150
		Rear	mm	1000	1000	1000	1000	1000	1000	1000	1000	1000	1000
Flue Diameter			mm ø	130	130	150	150	150	180	180	180	200	200
Combustion Air Spigot			mm ø	130	130	130	130	130	150	150	150	150	150
Noise Level (see Note Below)			dB(A)	55	60	60	62	69	61	72	73	74	76
Nett Weight (see Note Below)			kg	168	173	231	241	341	386	530	530	556	556
r3	Model			30	45	60	90	120	150	175	200	250	300

Notes –

- Fuel consumption and output figures based upon nett calorific values as follows – Natural gas (G20) nett CV 34.02 MJ/m³
- CXG heaters comply with the seasonal efficiency and NOx limits requirements of the Ecodesign regulation (EU) 2015/1188, Directive 2009/125/EC – Lot 21 Tier 1
- Air handling data is assessed at room ambient conditions
- Throw figures provide the distance to the point where the terminal velocity degrades to 0.25 m/s
- Overall vertical heater height include heads or extended heads where appropriate
- Standard height heads can be specified where site height is restricted
- Blank and louvred lower side panels are interchangeable
- Dimensions in table above refer to upright heaters only - for horizontal and counterflow heater dimensions refer to dimensions page
- Noise levels are applicable to standard UF models and are measured 5m from appliance and in free field conditions
- Motor kW, run and start amps apply to standard electrical supply as stated. For optional data contact sales office
- Nett weight figures apply to standard upright CXG heaters only
- It is the responsibility of the installing contractor to ensure that ductwork is correctly sized and balanced when installing a ducted unit.

Dimensions

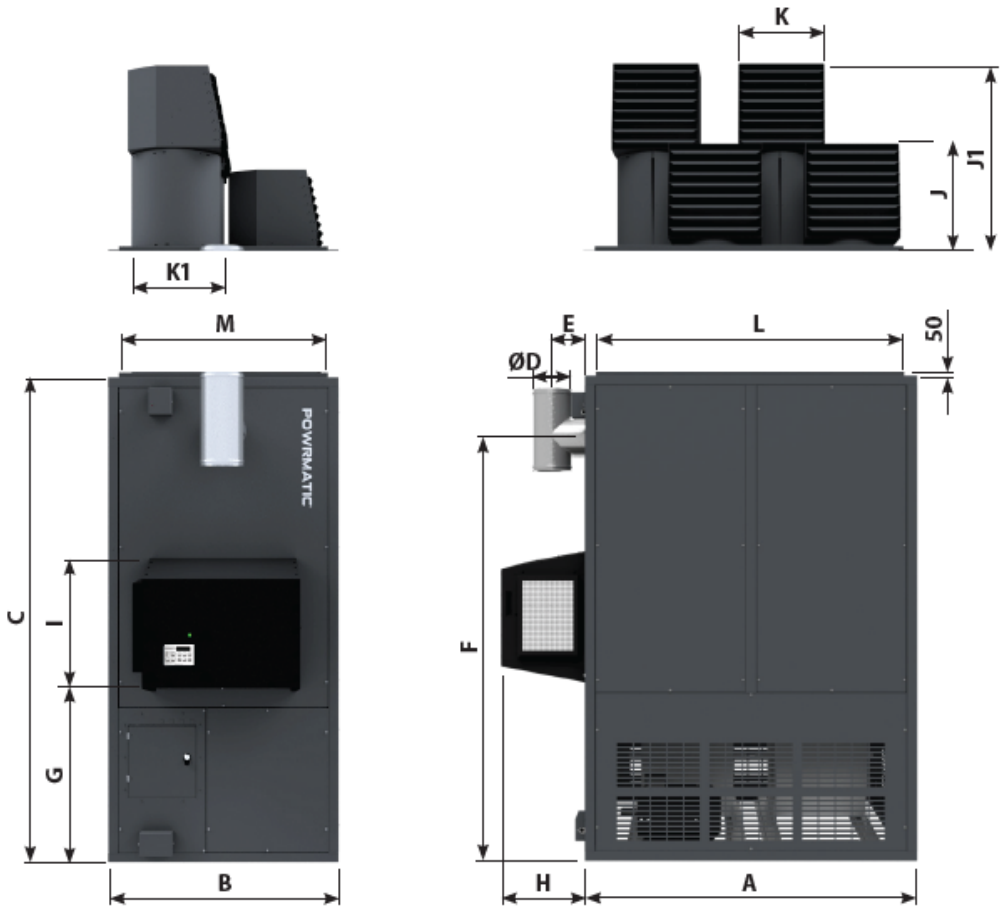

Model		30	45	60	90	120	150	175	200	250	300
A	mm	732	732	927	927	1200	1200	1399	1399	1599	1599
B	mm	669	669	744	744	904	904	904	904	1104	1104
C	mm	1767	1767	1895	1895	2149	2149	2265	2265	2265	2265
D	mm ø	125	125	150	150	150	175	175	175	200	200
E	mm	150	150	150	150	150	200	200	200	240	240
F	mm	1535	1535	1661	1661	1923	1923	2021	2021	2021	2021
G	mm	683	683	748	748	864	864	883	883	927	927
H	mm	351	351	351	351	440	440	440	440	440	440
I	mm	340	340	340	340	540	540	540	540	540	540
J	mm	238	238	238	340	340	340	400	442	558	558
J1	mm	N/A	N/A	581	672	672	672	788	875	1007	1007
K	mm	180	234	234	287	287	287	333	381	431	431
K1	mm	N/A	N/A	N/A	N/A	333	333	N/A	N/A	N/A	N/A
L	mm	632	632	824	824	1100	1100	1299	1299	1499	1499
M	mm	568	568	644	644	804	804	804	804	1004	1004

Notes -

- Flue tee provided as standard.

Dimensions

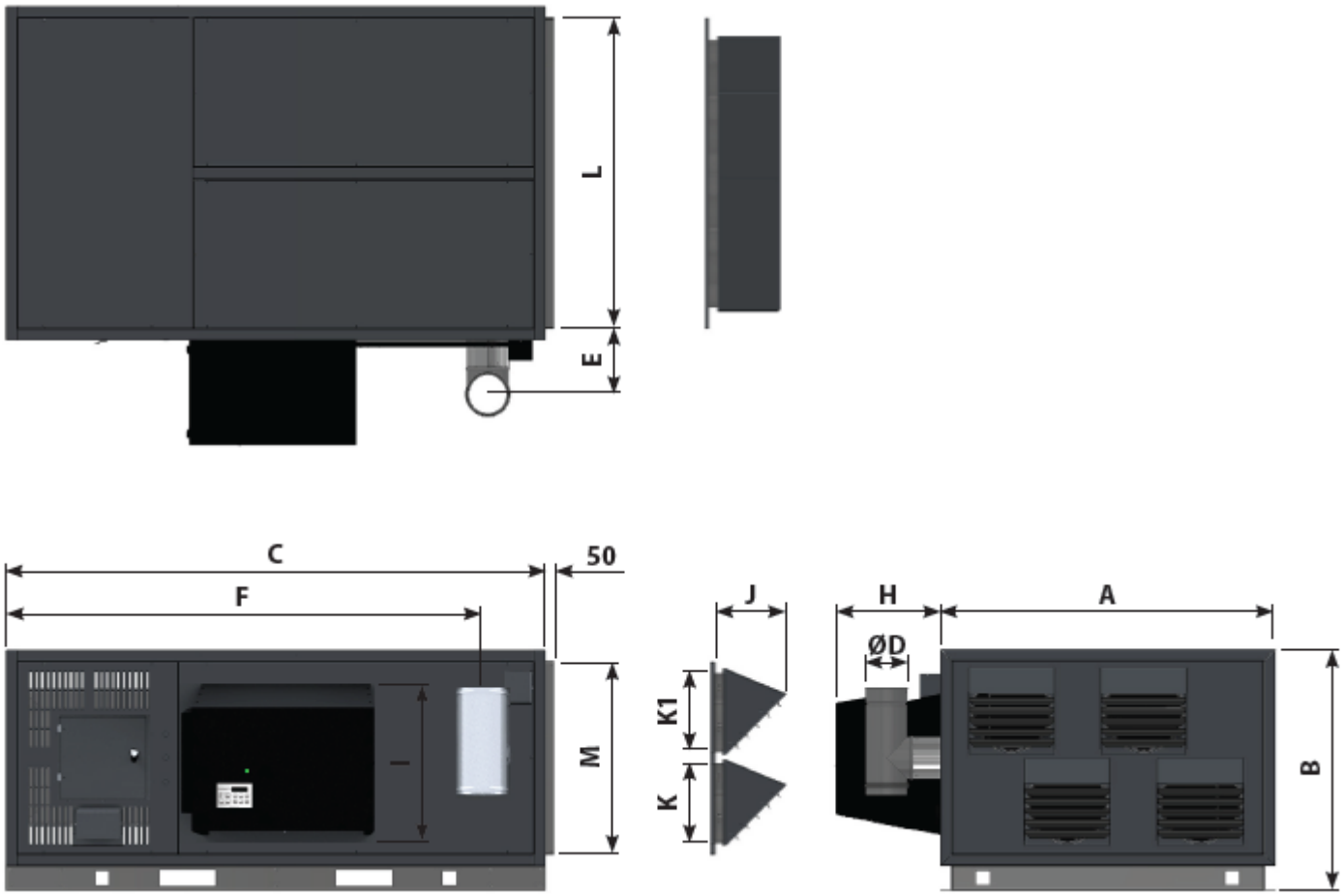

Model		30	45	60	90	120	150	175	200	250	300
A	mm	732	732	927	927	1200	1200	1399	1399	1599	1599
B	mm	819	819	894	894	1054	1054	1054	1054	1254	1254
C	mm	1767	1767	1895	1895	2151	2151	2265	2265	2265	2265
D	mm ø	125	125	150	150	150	175	175	175	200	200
E	mm	150	150	150	150	150	200	200	200	240	240
F	mm	1535	1535	1661	1661	1923	1923	2021	2021	2021	2021
H	mm	351	351	351	351	440	440	440	440	440	440
I	mm	340	340	340	340	540	540	540	540	540	540
J	mm	227	227	260	260	260	260	297	297	367	367
K	mm	180	234	234	287	287	287	333	381	431	431
K1	mm	N/A	N/A	N/A	N/A	333	333	N/A	N/A	N/A	N/A
L	mm	632	632	824	824	1100	1100	1299	1299	1499	1499
M	mm	569	569	644	644	804	804	804	804	1004	1004
Head Plan		1	1	2	2	3a	3a	3b	3b	3b	3b

Notes:

- Flue tee provided as standard.
- Screened air intake (SAI) fitted as standard on HF models. Duct spigot option available.
- Direction of airflow to be specified at time of order. Left to Right (L-R when looking at the burner) airflow shown above.

Dimensions

Upright

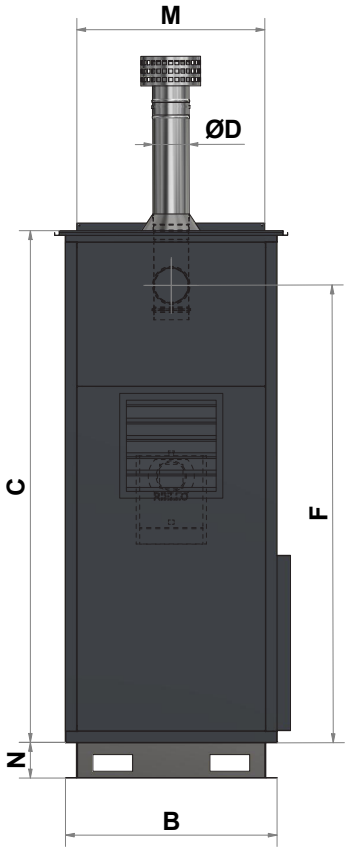



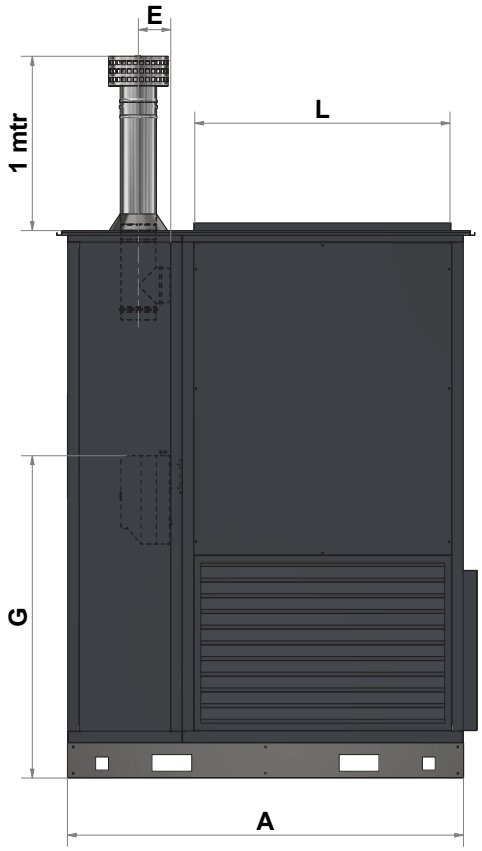

Horizontal

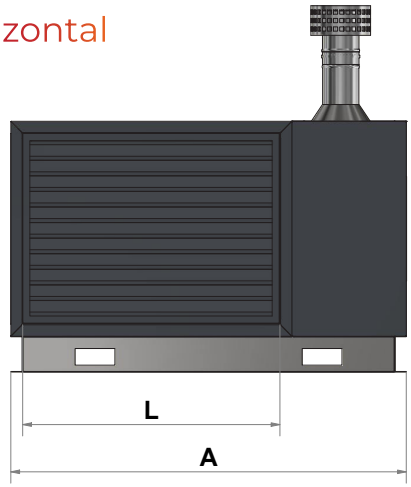

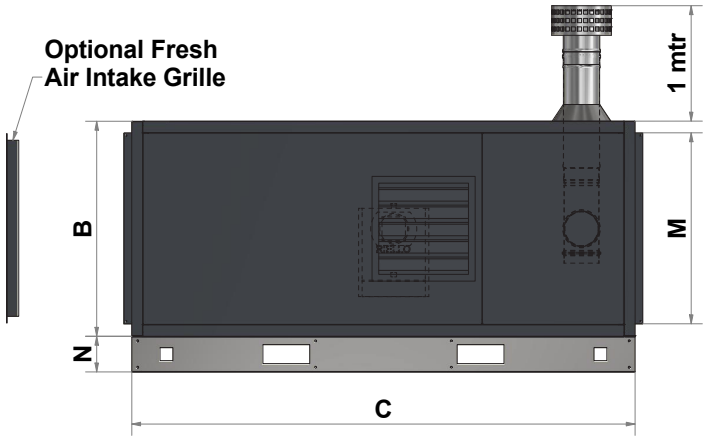

Model			30	45	60	90	120	150	175	200	250	300
A	All	mm	1184	1184	1379	1379	1692	1692	1891	1891	2280	2280
B	All	mm	669	669	744	744	904	904	904	904	1104	1104
C	All	mm	1767	1767	1895	1895	2149	2149	2265	2265	2265	2265
D	All	mm ø	130	130	150	150	150	180	180	180	200	200
E	All	mm	150	150	150	150	150	200	200	200	240	240
F	All	mm	1535	1535	1661	1661	1923	1923	2021	2021	2021	2021
G	All	mm	864	864	944	944	1122	1122	1122	1122	1122	1122
L	Duct Spigot	mm	632	632	824	824	1100	1100	1299	1299	1499	1499
M		mm	569	569	644	644	804	804	804	804	1004	1004
N	All	mm	125	125	125	125	150	150	150	150	150	150

Notes:

- Direction of airflow for horizontal heaters to be specified at time of order. Left to right (when looking at burner) airflow shown above.
- Inlet and Outlet duct spigots have the same dimensions (Horizontal units only).
- Primary flue length, cowl and flashing provided as standard.

Accessories

Side/Rear Inlet Spigots

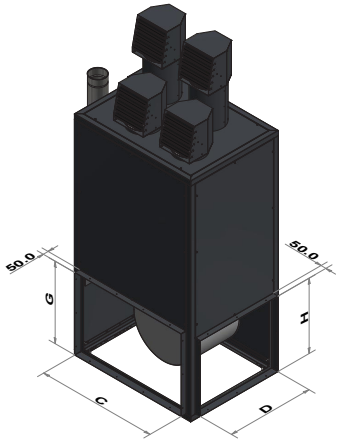

Filters

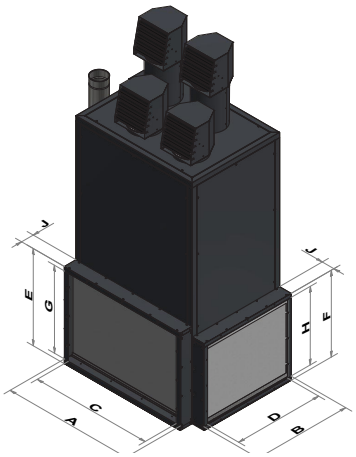

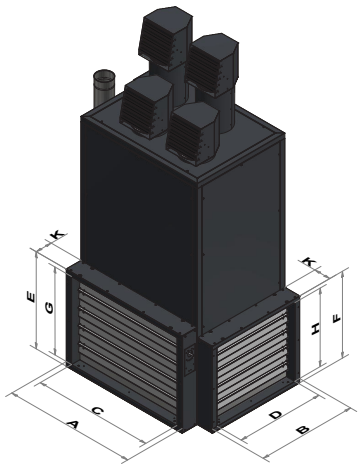

Model			30	45	60	90	120	150	175	200	250	300	360	440	590
A	All	mm	732	732	927	927	1200	1200	1399	1399	1599	1599	1915	2165	2715
B	All	mm	669	669	744	744	904	904	904	904	1105	1105	n/a	n/a	n/a
C	All	mm	630	630	825	825	1098	1098	1300	1300	1500	1500	1815	2065	2615
D	All	mm	567	567	642	642	802	802	802	802	1003	1003	n/a	n/a	n/a
E	All	mm	685	685	738	738	838	838	838	838	838	838	865	965	1265
F	All	mm	627	627	677	677	775	775	775	775	775	775	n/a	n/a	n/a
G	All	mm	585	585	640	640	738	738	738	738	738	738	765	865	1165
H	All	mm	527	527	577	577	675	675	675	675	675	675	n/a	n/a	n/a

Notes:

- All spigot dimensions are outside dimensions
- Vertical units shown - for horizontal units please contact our sales office
- EU1 Standard filter specification is 10ppi (parts per inch)
- Higher specification filters available on request - contact our Technical Support team for more information
- Standard dampers are manual operation - motorised options available
- Installer guidance notes on rear page

Head Plan Options

Head Plan 1
(30 & 45)

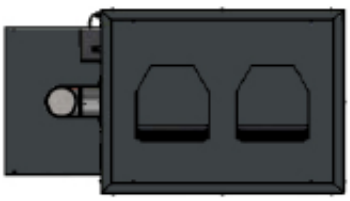

* Head Plan 2
(60 & 90)

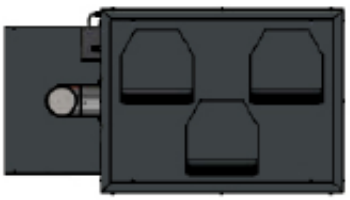

Head Plan 3a
(120 & 150)

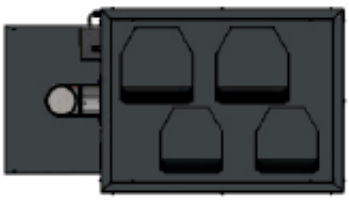

Head Plan 3b
(175, 200, 250 & 300)

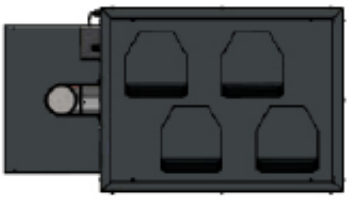

** head plan 2 cannot be inverted, as one head is required directly over the limit stat*

General
The following notes are provided as a guide, however installers and users should fully acquaint themselves with the more detailed guidance provided in the relevant Installation, Operation and Maintenance Manual. For copies of manuals please consult our technical department or visit our website - www.powrmatic.co.uk

Standards
CX and CX EA heaters must be installed, commissioned and operated with due regard to appropriate regulations including but not limited to BS 6230 2005, BS5410 1998, relevant Codes of Practice, the possible requirements of Local Authorities, Fire Officers and insurers as well as the Installation, Operation and Maintenance Manuals.

Position & Location
CX Heaters should be installed on a level non-combustible base. Horizontal heaters can be suspended. It is important that all supporting structures or methods of suspension have due regard to the relevant weight loadings.

External heaters are specifically designed for outside locations and should not be installed within partially enclosed areas or under canopies which may restrict the operation of the heater or evacuation of flue gases. If an external heater is to be located in any area which is partially or fully enclosed then it is recommended that you consult our technical department.

Consideration should also be given to flue routes and points of exit, gas, electrical and where applicable control connections, the throw characteristics of the heater, issues of public access and in the instance of remote temperature sensors the position necessary to be representative of the zone temperature to which they refer.

Heaters should not be installed in hazardous areas or areas where there is a foreseeable risk of flammable or corrosion inducing particles, gases or vapours being drawn into the combustion air or main fan circuits.

Areas where special consideration or advice may be required could include but is not limited to -

- Where de-greasing solvents are present, even in minute concentrations
- Where paint spraying is carried out
- Where styrenes or other laminating products are used
- Where foam products are moulded, cut or fabricated
- Where airborne silicone is present
- Where petrol engined vehicles are stored or maintained
- Where dust is present (ie wood working or joinery shops)
- Where high levels of extract persist

Installation in such areas may be possible under specific conditions. Please consult our technical department or your local sales manager for further information.

Plant Room or Enclosure Locations
Specific requirements exist where heaters are to be installed in a plant room or enclosure. Such requirements include the provision of positive ductwork connections as well as ventilation for combustion air and general ventilation. It is recommended that you consult with our technical department or your local area sales manager for further guidance.

Combustion Air & General Ventilation
Within the United Kingdom mandatory regulations apply concerning the provision of combustion air and general heater ventilation. Where a heater is installed within the heated space and where that heated space has a natural ventilation rate greater than 0.5 air changes per hour then combustion air and general heater ventilation is probably not required.

If the heated space has a natural ventilation rate of less than 0.5 air changes per hour then either natural ventilator openings or mechanical ventilation will be required. Please consult the Installation, Operation and Maintenance Manual for further details

External heaters located in unrestricted outside areas will generally source combustion air from the surroundings and as such no additional requirements should be necessary.

Installation Clearances
Particular clearances may be necessary for the correct and safe function of the heater as well as for maintenance purposes. Such clearances are confirmed in the relevant Installation, Operation and Maintenance Manual

Flue
CX heaters are supplied with a 90° flue tee that has a flue gas analysis sample point. For internally located heaters each heater requires a separate flue system of the appropriate size. The flue should essentially be installed in the vertical plane and the number of bends kept to a minimum.

The flue must be adequately supported and terminated with a suitable cowl, with due regard to the point of exit and it's proximity to any windows, doors or ventilation intakes.

External heaters are supplied complete with a primary flue section and cowl which provides the direct discharge of flue gases directly to atmosphere. Care should be taken to ensure that the flue discharge is not in anyway restricted or the exit point such that flue gases can enter a building.

If the application requires it may be possible to extend the flue of external heaters to enable the point of discharge to be repositioned. However should this be necessary then the diameter of flue must not be less than stated in the data sections of this brochure.

Pipework
Care should be taken when sizing pipework to ensure that minimum gas pressures are not compromised under dynamic load conditions. Isolating valves and service unions should be provided for each heater and pipework installed with due regard for relevant standards and Codes of Practice.

Ductwork
CX heaters can be fitted with distribution ductwork and/or inlet or return air duct connections. Installers must ensure that the combined duct resistances, including grilles, filters, dampers or other ductwork components are balanced to closely match the static pressure as shown on page 4 of this brochure. Insufficient or excessive duct resistance will compromise the performance of the heater. Please consult our technical department or your local area sales manager for further guidance.

Guarantee
Powrmatic CX heaters are provided with a comprehensive guarantee covering both the heater and the heat exchanger. For United Kingdom sales the heater has the benefit of a two year parts and one year labour guarantee whilst the heat exchanger assembly has a ten year time related warranty. All guarantees are subject to terms and conditions.



TIME RELATED HEAT EXCHANGER WARRANTY


ULTRA
LOW
NOx
POWRMATIC
Heat
Boost
Fan
Decrease
Select
Increase
Back
Quit
Next
www.powrmatic.co.uk


BURNERTECH
Burnertech
INVERTERJET®
ULTRA LOW NOX BURNER
www.burnertech.co.uk
+44 (0)1204 393222
BURNER ON
FAULT
RESET

POWRMATIC

Working together to decarbonise your building through efficient HVAC technologies.

Powrmatic is a trusted leader in the manufacture and supply of advanced HVAC solutions. Our diverse portfolio includes multi-energy heating and cooling systems, innovative air movement technologies, advanced natural and smoke ventilation, and air conditioning solutions. We work closely with building design specialists, architects, consultants, and HVAC professionals to deliver sustainable, high-performance systems that ensure optimal comfort, safety, and energy efficiency for industrial, commercial, and institutional environments.

Heating

Tailored heating systems for industrial and commercial sectors, crafted to meet the specific and requirements for any application. Our heating solutions combine energy efficiency, sustainability, and dependable performance to deliver optimal results and ensure long-lasting value.

Ventilation

Advanced smoke and natural ventilation systems, designed for life safety and building protection in commercial, industrial, and institutional environments. Our solutions ensure compliance with safety standards, delivering efficient and reliable performance.

Air Conditioning

Innovative packaged heat pump air conditioning systems, ideal for hotels, care homes, and office spaces. Our systems provide reliable, energy-efficient climate control, enhancing comfort while reducing energy consumption and supporting sustainable building practices.

Scan the QR code to arrange your free site survey

UK Office

Hort Bridge
Iminster
Somerset
TA19 9PS

+44 (0) 1460 53535
info@powrmatic.co.uk
www.powrmatic.co.uk

Ireland Office

Powrmatic Ireland
45 Broomhill Close
Tallaght
Dublin 24

tel: +353 (0) 1452 1533
info@powrmatic.ie
www.powrmatic.ie

Powrmatic pursues a policy of continuous improvement in both design and performance of its products and therefore reserves the right to change, amend or vary specifications without notice. Whilst the details contained herein are believed to be correct they do not form the basis of any contract and interested parties should contact the Company to confirm whether any material alterations have been made since publication of this brochure.

Issue 1.2